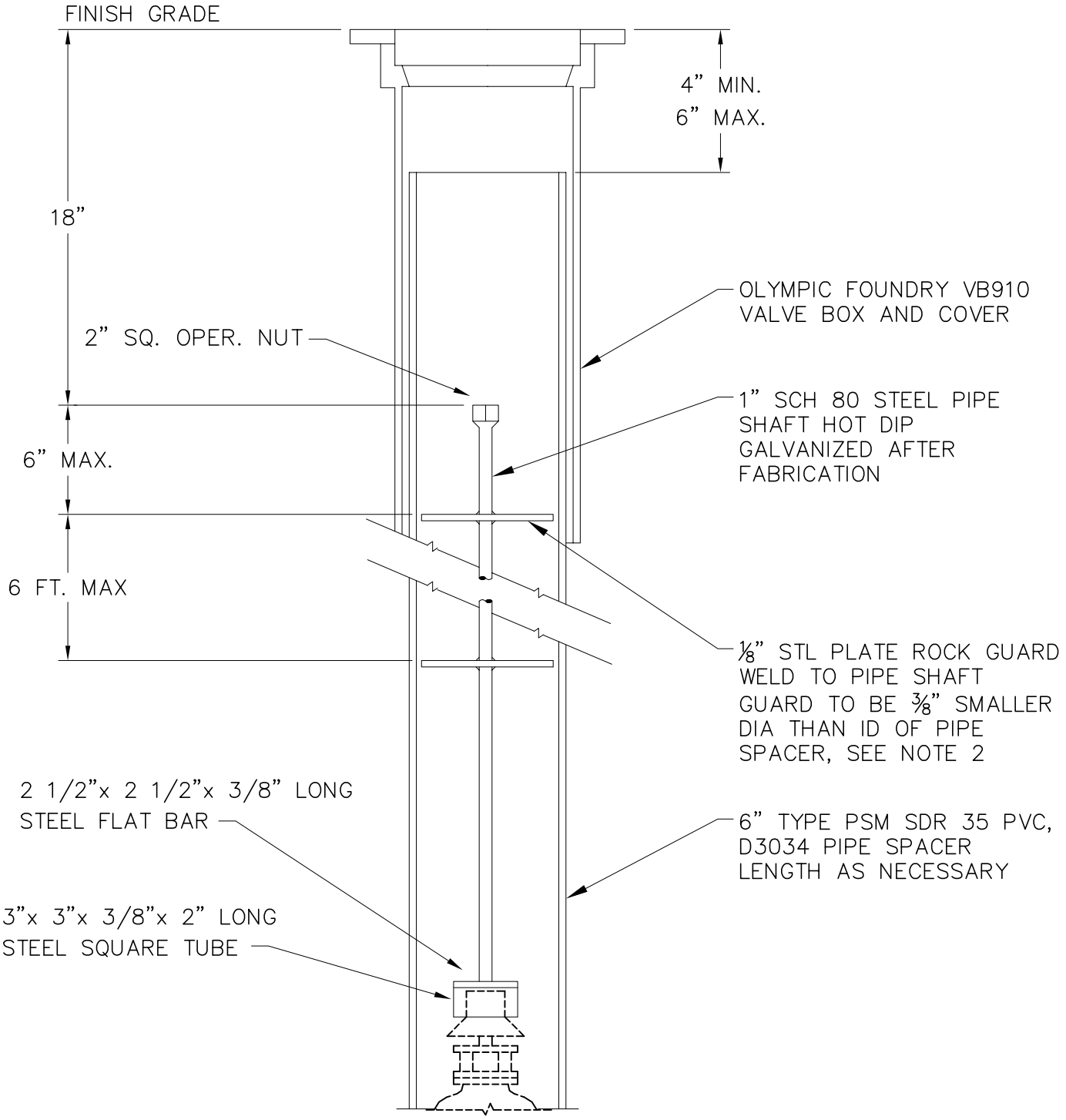

NOTES:

1) EXTEND 2" NUT TO WITHIN 18" OF FINISH GRADE WHEN VALVE NUT IS DEEPER THAN 3 FEET FROM FINISHED GRADE

2) WHERE DEPTH IS OVER 6 FEET. A SECOND PLATE WILL BE INSTALLED EQUALLY BETWEEN ROCK GUARD AND 2" VALVE NUT.

DATE:	BY:	REVISION

NORTH PLAINS
City to the Sunset

VALVE OPERATOR EXTENSION

SCALE:	N.T.S
APPVD:	BAB
DATE:	10/05
DWG NO.:	311

G:\04\0682\100 General Services\CAD\X-1.dwg Oct/28/05